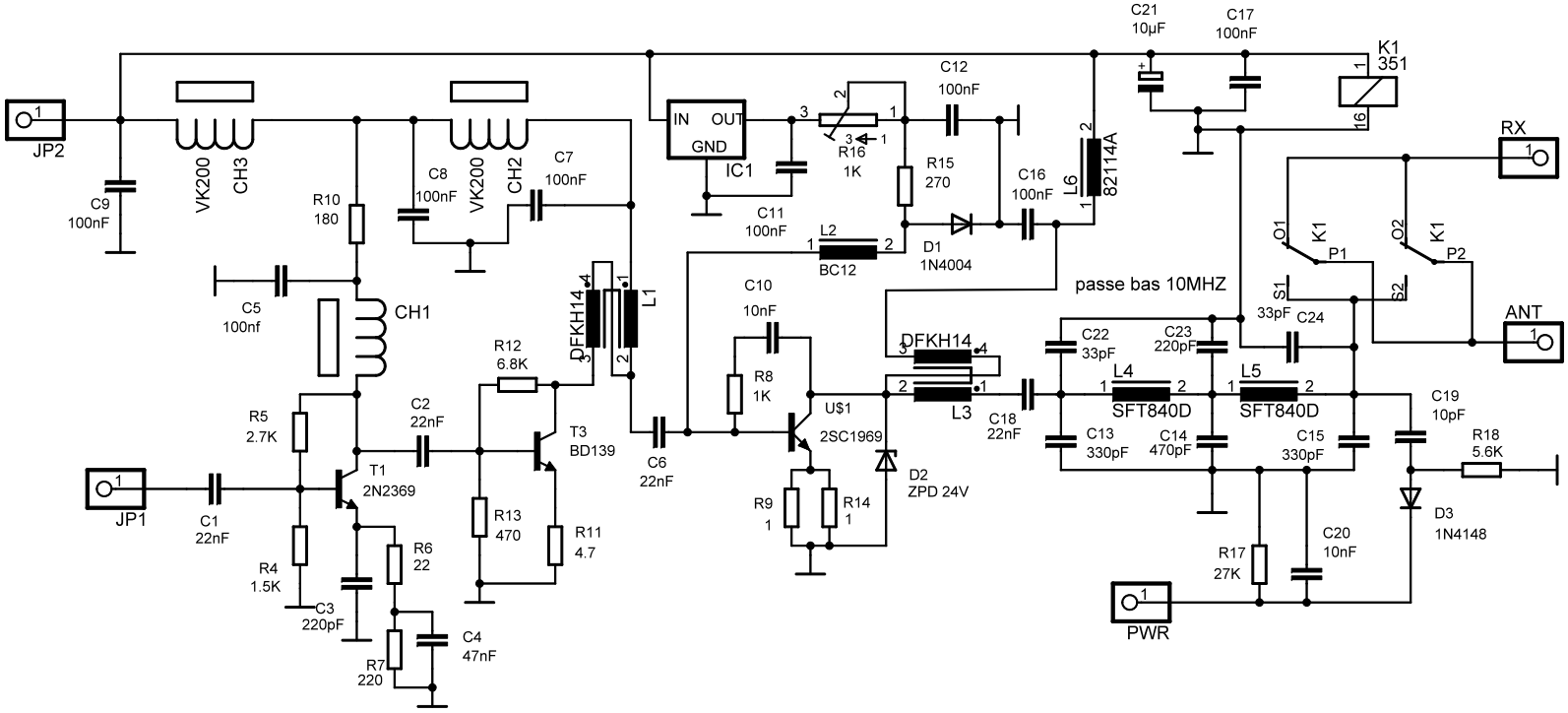
JP2
C9
100nF
VK200
CH3
R10
180
C8
100nF
VK200
CH2
C7
100nF
C5
100nf
CH1
R5
2.7K
C2
22nF
R12
6.8K
DFKH14
L1
T3
BD139
C6
22nF
JP1
C1
22nF
T1
2N2369
R4
1.5K
C3
220pF
R6
22
R7
220
C4
47nF
R13
470
R11
4.7
IN
OUT
GND
IC1
C11
100nF
R16
1K
C12
100nF
R15
270
L2
BC12
D1
1N4004
C16
100nF
L6
82114A
C10
10nF
R8
1K
U$1
2SC1969
R9
1
R14
1
D2
ZPD 24V
DFKH14
L3
C18
22nF
C21
10µF
C17
100nF
K1
351
RX
O1
K1
P1
O2
K1
P2
S1
33pF
C24
ANT
passe bas 10MHZ
C22
33pF
C23
220pF
L4
SFT840D
L5
SFT840D
C13
330pF
C14
470pF
C15
330pF
C19
10pF
R18
5.6K
D3
1N4148
R17
27K
C20
10nF
PWR